PRODUCT **SPECIFICATIONS**

EXCAVATOR

SY215C LC

STANDARD FEATURES

- Heavy-duty, long undercarriage
- 1-way and 2-way primary auxiliary and 2-way secondary auxiliary circuits
- Heated air ride seat
- Rear view camera
- Bright LED work light package
- Powerful Cummins Engine

164 hp
Gross Power

21' 8"
Dig Depth

51,919 lbs
Operating Weight

28,551 lbf
Bucket Breakout

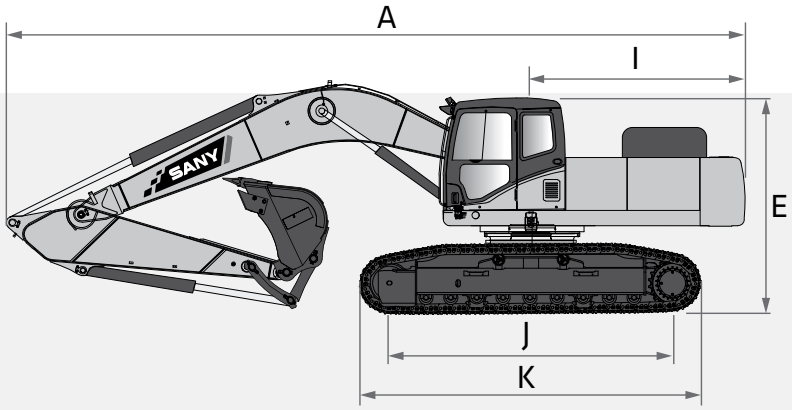

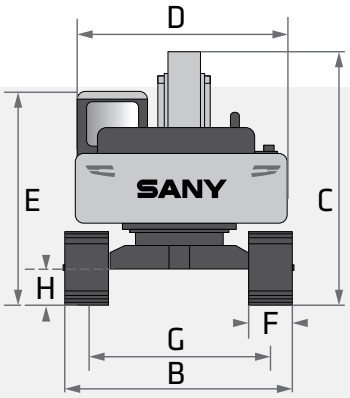

TECHNICAL SPECIFICATIONS

TECHNICAL SPECIFICATIONS		
Operating Weight	51,919 lbs	23 550 kg
Ground Pressure	5.3 psi	36.3 kPa
Engine	Cummins QSB6.7 T4F	
Displacement	408.9 in^3	6.7 L
Gross Power	163.6 HP	122 kW
Hydraulics	Positive Flow Control with Pilot Control	
Main Hydraulic Pump	Axial Piston – Variable Displacement	
Operating Flow (maximum)	117.3 gal/min	444.0 L/min
Operating Pressure (maximum)	4,975 psi	34.3 MPa
Power Boost Pressure (maximum)	5,410 psi	37.3 MPa
Travel Motor	Axial Piston with Park Brake	
Travel Pressure (maximum)	4,975 psi	34.3 MPa
Travel Speeds (maximum)	1.9 / 3.3 mph	3.1 / 5.3 km/hr
Travel Effort (maximum)	40,466 lbf	180.0 kN
Grade Capability (maximum)	35°	
Swing Motor	Axial Piston with Swing Brake	
Swing Pressure (maximum)	3,989 psi	27.5 MPa
Swing Speed (maximum)	10.9 RPM	
Undercarriage (standard)	Steel Track	
Track Shoe width (standard)	31"	800 mm
Track Rollers (per side)	9	
Carrier Rollers (per side)	2	

DIMENSIONS

DIMENSIONS			
	Boom Length	18' 8"	5 700 mm
	Stick (Arm) Length	9' 7"	2 919 mm
A	Transport Length	31' 11"	9 728 mm
B	Transport Width	10' 5"	3 180 mm
C	Transport Height	11' 1"	3 370 mm
D	Upper Structure Width	8' 11"	2 710 mm
E	Cab Height	10' 0"	3 050 mm
F	Track Width (standard shoe)	31"	800 mm
G	Track Gauge	7' 10"	2 380 mm
H	Ground Clearance (minimum)	19"	480 mm
I	Tail Swing Radius	9' 6"	2 890 mm
J	Track Length on Ground	11' 11"	3 640 mm
K	Track Length	14' 7"	4 450 mm

SERVICE REFILL CAPACITIES

SERVICE REFILL CAPACITIES		
Fuel Tank Capacity	89.5 gal	340.0 L
DEF Tank Capacity	5.0 gal	19.0 L
Hydraulic Tank Capacity	60.5 gal	230.0 L
Engine Oil Capacity	7.1 gal	27.0 L
Cooling System Capacity	7.3 gal	27.6 L

In the interest of continual equipment development, SANY America Inc. reserves the right to change these specifications at any time without prior notification.
©2023 SANY America Inc. HEXPS23SY215CLC001

PRODUCT **SPECIFICATIONS EXCAVATOR** || SY215C LC

SANY

STANDARD AND OPTIONAL EQUIPMENT

s = standard / **o** = optional

SY215C LC	ENGINE
s	6.7l Cummins
s	Auto-idle
s	Dual-element dry air filter
s	Batteries 24V (2–12V)
s	Coolant expansion tank
s	Electronic engine control
s	Enclosed fan guard
s	Engine coolant to –37 deg. C (–34 deg. F)
s	Fuel filter with water separator
s	Full-flow oil filter
s	Turbocharger with charge air cooler
s	High-flow electric clutch actuated fan
s	500-hour engine oil change interval
s	70% (35 deg.) off-level capability
s	Engine air precleaner
	HYDRAULIC SYSTEM
s	Spring-applied, hydraulically released automatic swing brake
s	Auxiliary hydraulic-flow adjustments through monitor
s	Lift power boost on joystick
s	Control pattern change valve
s	Auxiliary hydraulics with 1- and 2-way combination piping for high flow
s	Auxiliary hydraulics with 2-way rotation piping and controls
s	Auxiliary pilot and electric controls
o	Quick coupler plumbing and control
	UNDERCARRIAGE
s	Planetary drive with axial piston motors
s	Propel motor shields
s	Spring-applied, hydraulically released automatic propel brake
s	Track guides, front idler and 2 additional per side
s	2-speed travel selection
s	Upper carrier rollers (2)
s	Sealed and lubricated track chain
s	Triple semi-grouser shoes, 800 mm (32")
s	Undercarriage frame opening guard
	BOOM & STICK
s	Boom 5.7m (18' 8") included
s	Stick, 2.9 m (9' 7") included
	UPPERSTRUCTURE
s	Right-hand and left-hand mirrors
s	Vandal lock with ignition key: cab door / service door / toolbox / cab filter
s	Debris screen in side panel
s	Remote-mounted engine oil and fuel filters
s	Heavy duty triangle channel frame guard
	ATTACHMENTS
s	Convenient grease points
s	Dirt seals on all bucket pins

In the interest of continual equipment development, SANY America Inc. reserves the right to change these specifications at any time without prior notification.
©2023 SANY America Inc. HEXPS23SY215CLC001

INDUSTRY'S STRONGEST STANDARD WARRANTY | 5-YEAR* 5,000 HOURS

*Warranty applies to 2023 Excavator and Wheel Loader models only.

STANDARD AND OPTIONAL EQUIPMENT

s = standard / **o** = optional

SY215C LC	ATTACHMENTS (cont.)
s	Oil-impregnated bushings
s	Reinforced resin thrust plates
o	Quick coupler
o	Buckets: heavy-duty / heavy-duty high capacity / side cutter and teeth
	OPERATOR'S STATION
s	Adjustable independent-control positions (levers-to-seat, seat-to-pedals)
s	AM/FM radio with USB charging and Bluetooth® connectivity
s	Auto climate control / air conditioner / heater / pressurizer
s	Built-in operator's manual storage compartment and manual
s	12 and 24V outlets 60 watt 5 amp
s	Deluxe heated air suspension cloth seat, with adjustable armrests
s	Heavy duty rubber floor mat
s	Front windshield wiper with variable speeds
s	Iluminated gauge: diesel exhaust fluid, engine coolant, and fuel levels
s	Horn, electric
s	Hour meter, electric
s	Hydraulic shutoff lever, all controls
s	Interior light
s	Large cup holder
s	Digital power mode selection: 3 power modes—low, standard, and high
s	Digital tool selection: bucket, shear, hammer, etc.
s	Multifunction color LCD monitor with: diagnostic capability / multiple-language / maintenance tracking / clock
s	System monitoring with alarm features: auto-idle indicator, engine air cleaner, restriction indicator light, engine check, engine coolant temperature indicator light with audible alarm, engine oil pressure indicator light with audible alarm, low alternator charge indicator light, low fuel indicator light, low DEF indication with audible alarm, fault code alert indicator, fuel-rate display, wiper-mode indicator, work lights on indicator, and work mode indicator
s	Motion alarm with cancel switch (conforms to SAE J994)
s	Power-boost switch on right joystick
s	Auxiliary hydraulic control switches in right console lever
s	Seat belt, 2", non-retractable
s	Transparent overhead hatch
s	Heated or cooled food/beverage storage
s	Air-suspension heated seat
s	Hydraulic oil filter restriction indicator light
o	Protection screens for cab front, rear, and side
	ELECTRICAL
s	60-amp alternator
s	Ground level electrical disconnect (lockout tag out)
s	Blade type multi-fused circuits
s	Positive terminal battery covers
s	Rearview camera
	LIGHTS
s	Work lights: high power LED—2 mounted on boom, 2 mounted on top of cab, 1 mounted under step on right side of machine

In the interest of continual equipment development, SANY America Inc. reserves the right to change these specifications at any time without prior notification.
©2023 SANY America Inc. HEXPS23SY215CLC001

PRODUCT **SPECIFICATIONS EXCAVATOR** | SY215C LC

WORKING RANGE

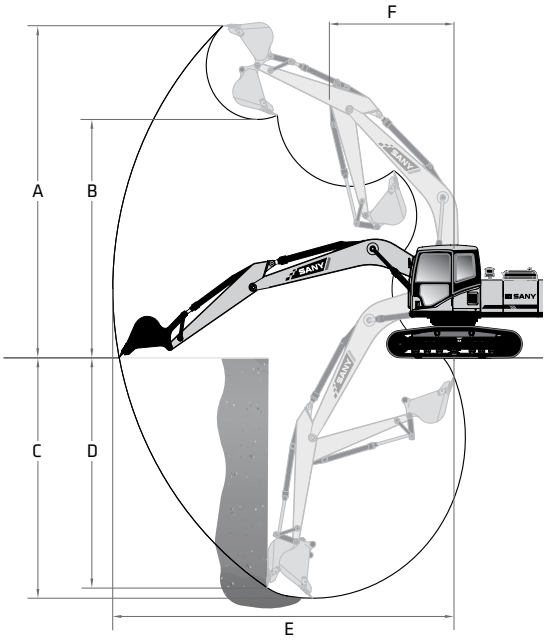

WORKING RANGE			
	Boom Length	18' 8"	5 700 mm
	Stick (Arm) Length	9' 7"	2 919 mm
A	Maximum Digging Height	30' 1"	9 180 mm
B	Maximum Dumping Height	21' 11"	6 670 mm
C	Maximum Digging Depth	21' 8"	6 600 mm
D	Maximum Vertical Wall Digging Depth	19' 7"	5 980 mm
E	Maximum Reach at Ground Level	33' 10"	10 307 mm
F	Minimum Swing Radius	12' 3"	3 730 mm

DIGGING PERFORMANCE		
Boom Length	18' 8"	5 700 mm
Stick (Arm) Length	9' 7"	2 919 mm
Bucket Breakout Force (ISO)	28,551 lbf	127.0 kN
Stick (Arm) Digging Force (ISO)	23,155 lbf	103.0 kN

LIFTING PERFORMANCE

Standard 18' 8" (5 700 mm) Boom
Standard 9' 7" (2 919 mm) Stick
Standard 31" (800 mm) Track Shoes
No Bucket

Ratings are based on ISO 10567:2007. Lift capacity does not exceed 75% of tipping load with the machine on firm, level ground or 87% of hydraulic lifting capacity.

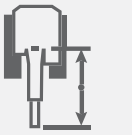

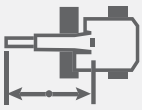

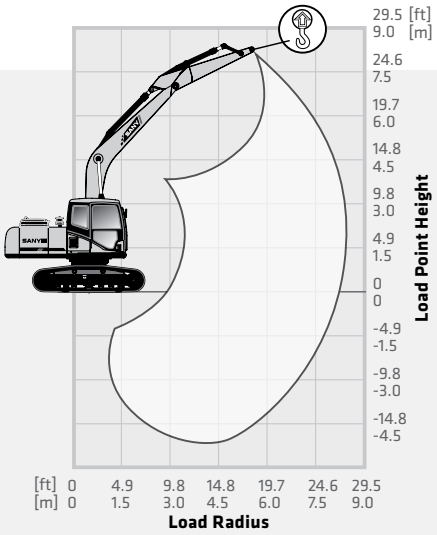

LOAD RADIUS	9.8 ft 3.0 m		14.8 ft 4.5 m		19.7 ft 6.0 m		24.6 ft 7.5 m		MAX REACH	
LOAD POINT HEIGHT										
24.6 ft 7.5 m					9,407 lb* 4 267 kg*	9,407 lb* 4 267 kg*			10,463 lb* 4 746 kg*	10,463 lb* 4 746 kg*
19.7 ft 6.0 m					10,179 lb* 4 617 kg*	10,179 lb* 4 617 kg*			10,617 lb* 4 816 kg*	9,590 lb 4 350 kg
14.8 ft 4.5 m					11,374 lb* 5 159 kg*	11,374 lb* 5 159 kg*	10,882 lb* 4 936 kg*	9,054 lb 4 107 kg	10,933 lb* 4 959 kg*	8,276 lb 3 754 kg
9.8 ft 3.0 m			16,718 lb* 7 583 kg*	16,718 lb* 7 583 kg*	13,245 lb* 6 008 kg*	12,081 lb 5 480 kg	11,707 lb* 5 310 kg*	8,827 lb 4 004 kg	11,365 lb* 5 155 kg*	7,401 lb 3 357 kg
4.9 ft 1.5 m			20,477 lb* 9 288 kg*	16,987 lb 7 705 kg	15,196 lb* 6 893 kg*	11,552 lb 5 240 kg	12,705 lb* 5 763 kg*	8,569 lb 3 887 kg	11,102 lb 5 036 kg	7,394 lb 3 354 kg
0 ft 0 m	15,126 lb* 6 861 kg*	15,126 lb* 6 861 kg*	22,677 lb* 10 286 kg*	16,378 lb 7 429 kg	16,654 lb* 7 554 kg*	11,175 lb 5 069 kg	12,714 lb 5 767 kg	8,375 lb 3 799 kg	11,378 lb 5 161 kg	7,538 lb 3 419 kg
-4.9 ft -1.5 m	24,132 lb* 10 946 kg*	24,132 lb* 10 946 kg*	23,219 lb* 10 532 kg*	16,195 lb 7 346 kg	17,174 lb* 7 790 kg*	11,010 lb 4 994 kg	12,648 lb 5 737 kg	8,314 lb 3 771 kg	10,655 lb 4 833 kg	8,144 lb 3 694 kg
-9.8 ft -3.0 m	31,713 lb* 14 385 kg*	30,785 lb 13 964 kg	22,174 lb* 10 058 kg*	16,316 lb 7 401 kg	16,543 lb* 7 504 kg*	11,074 lb 5 023 kg			14,268 lb* 6 472 kg*	9,597 lb 4 345 kg
-14.8 ft -4.5 m	26,358 lb* 11 956 kg*	26,358 lb* 11 956 kg*	18,682 lb* 8 474 kg*	16,788 lb 7 615 kg					15,278 lb* 6 930 kg*	13,373 lb 6 066 kg

* Indicates load limited by hydraulic lifting capacity.

In the interest of continual equipment development, SANY America Inc. reserves the right to change these specifications at any time without prior notification.
©2023 SANY America Inc. HEXPS23SY215CLC001

SANY America Inc. 318 SANY Way
Peachtree City, Georgia 30269
470.552.SANY sanyamerica.com